# RASA 6 Dovetail Bar #94291

Installation Guide

**Kit Includes:**

1x RASA 6 Dovetail Bar

3x Mounting Screws (M4-0.7x12mm)

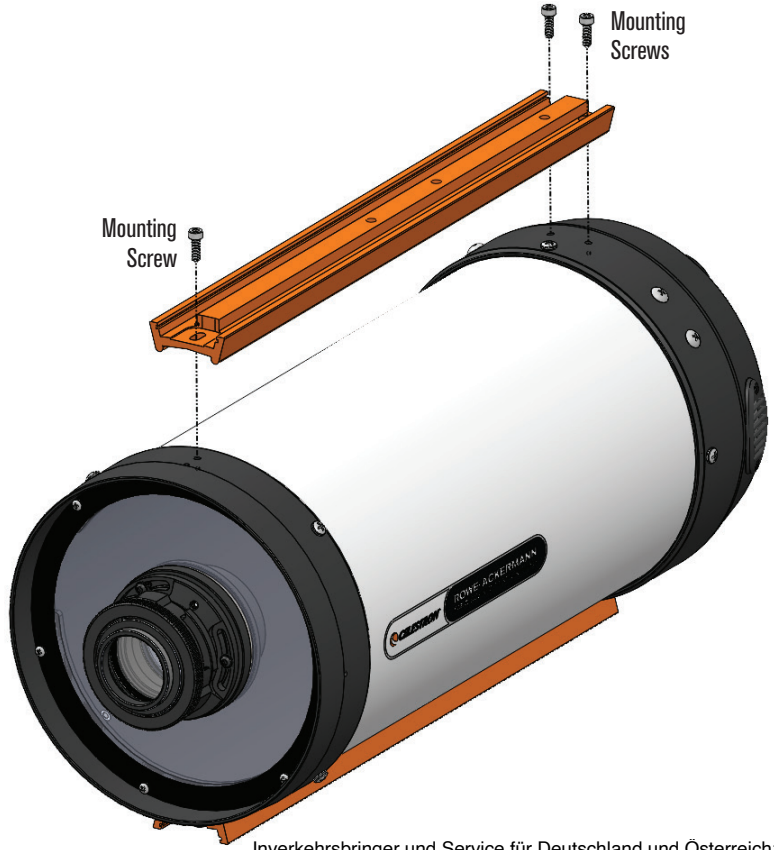


**NEED ASSISTANCE?** Contact Celestron Technical Support

celestron.com/pages/technical-support

©2024 Celestron. Celestron and Symbol are trademarks of Celestron, LLC.
All rights reserved. Celestron.com

US: 2835 Columbia Street, Torrance, CA 90503 USA

UK: Unit 2 Transigo, Gables Way, Thatcham RG19 4JZ, United Kingdom

This product is designed and intended for use by those 14 years of age and older.

www.celestron.com/pages/warranty

WARRANTY 2 YEAR

FR Cet appareil se recyclent — À DÉPOSER EN MAGASIN OU À DÉPOSER EN DÉCHÈTERIE

Points de collecte sur www.quefairedemesdechets.fr
Privilégiez la réparation ou le don de votre appareil !

22 PAP Carta

Separate waste collection. Check your local municipal guidelines.

Raccolta differenziata. Verifica le disposizioni del tuo Comune.

Inverkehrsbringer und Service für Deutschland und Österreich:
Baader Planetarium GmbH – Zur Sternwarte - 82291 Mammendorf
Tel.: 08145/80890 - service@celestron-deutschland.de